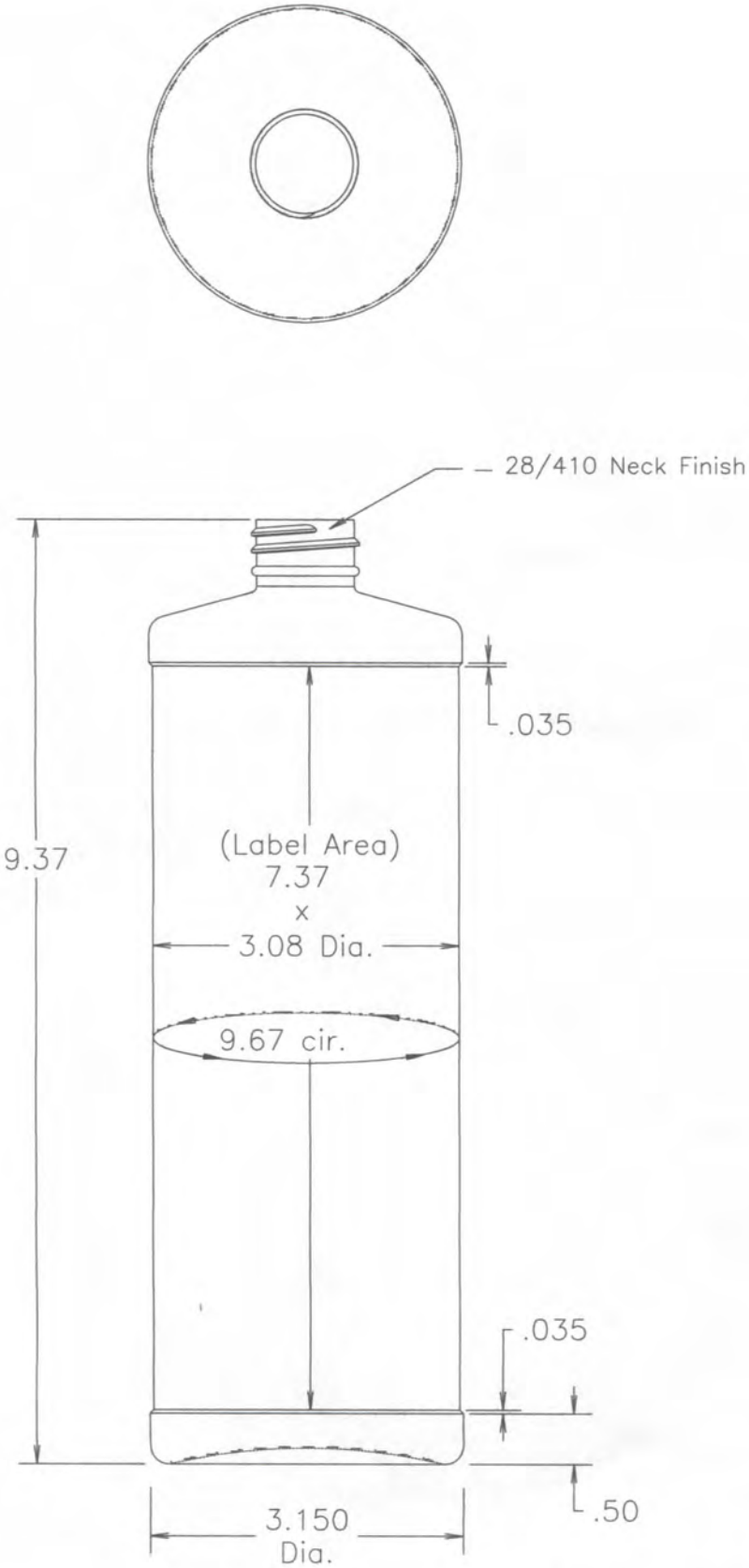

R.N.FINK MFG. CO. WILLIAMSTON, MI 48895	
Date:July.12,2016	Do Not Scale Drawing
Weight: Grams	Drawn by: R.Scott
Part Name: 32 oz. Ring Cylinder 28/410 Neck Finish	