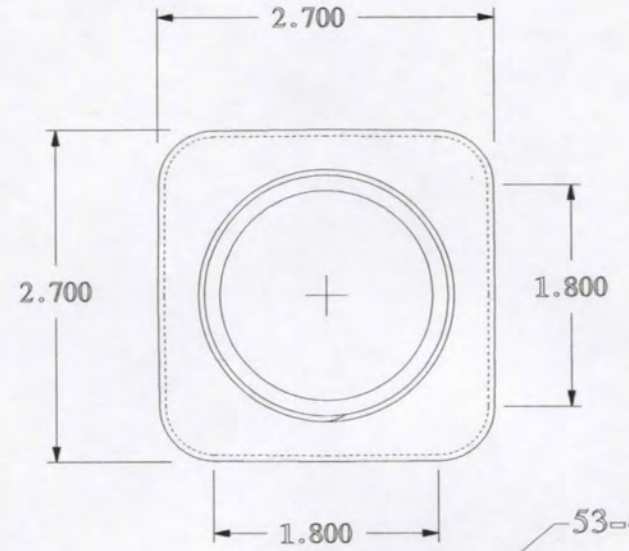

"T" = 2.050 +.017 -.017
"E" = 1.955 +.017 -.017
"H" = 0.540 +.017 -.017
"S" = 0.045 +.017 -.017
6-TPI

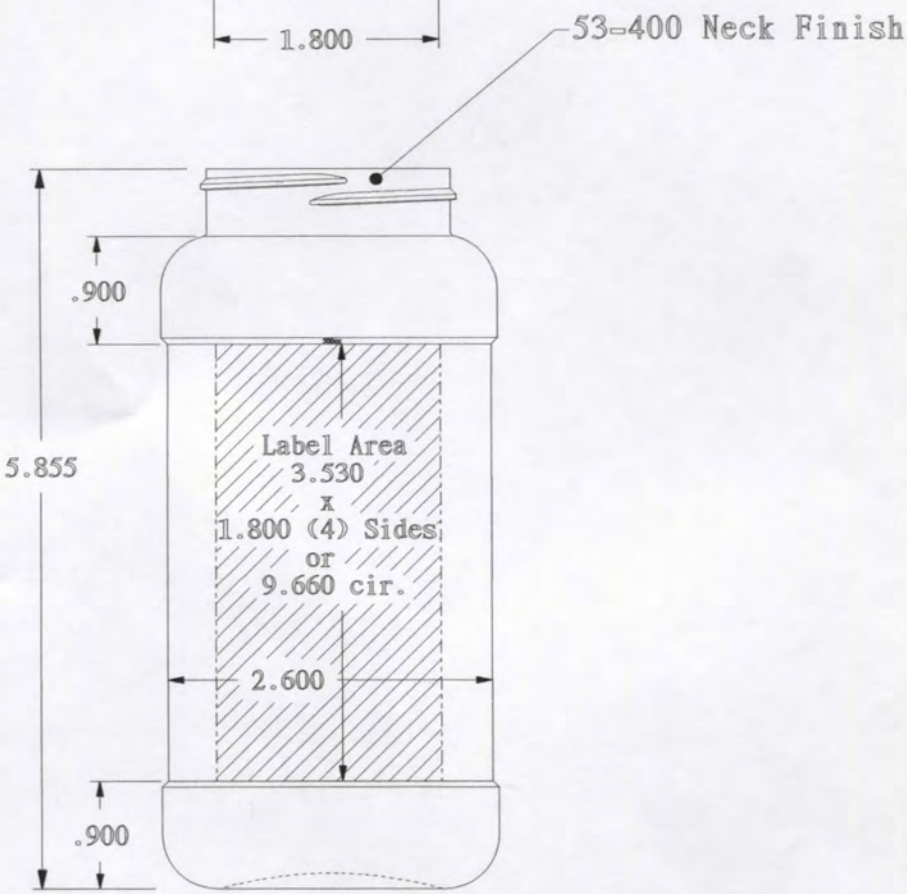

R. N. FINK MFG. CO.
Williamston, Mi. 48895
517-655-4351

Date: 02 / 16, 2015

NOT TO SCALE
Drawn By: R.Scott

OVERFLOW =

Part Name: 500cc Panel Square 53-400 Neck Finish